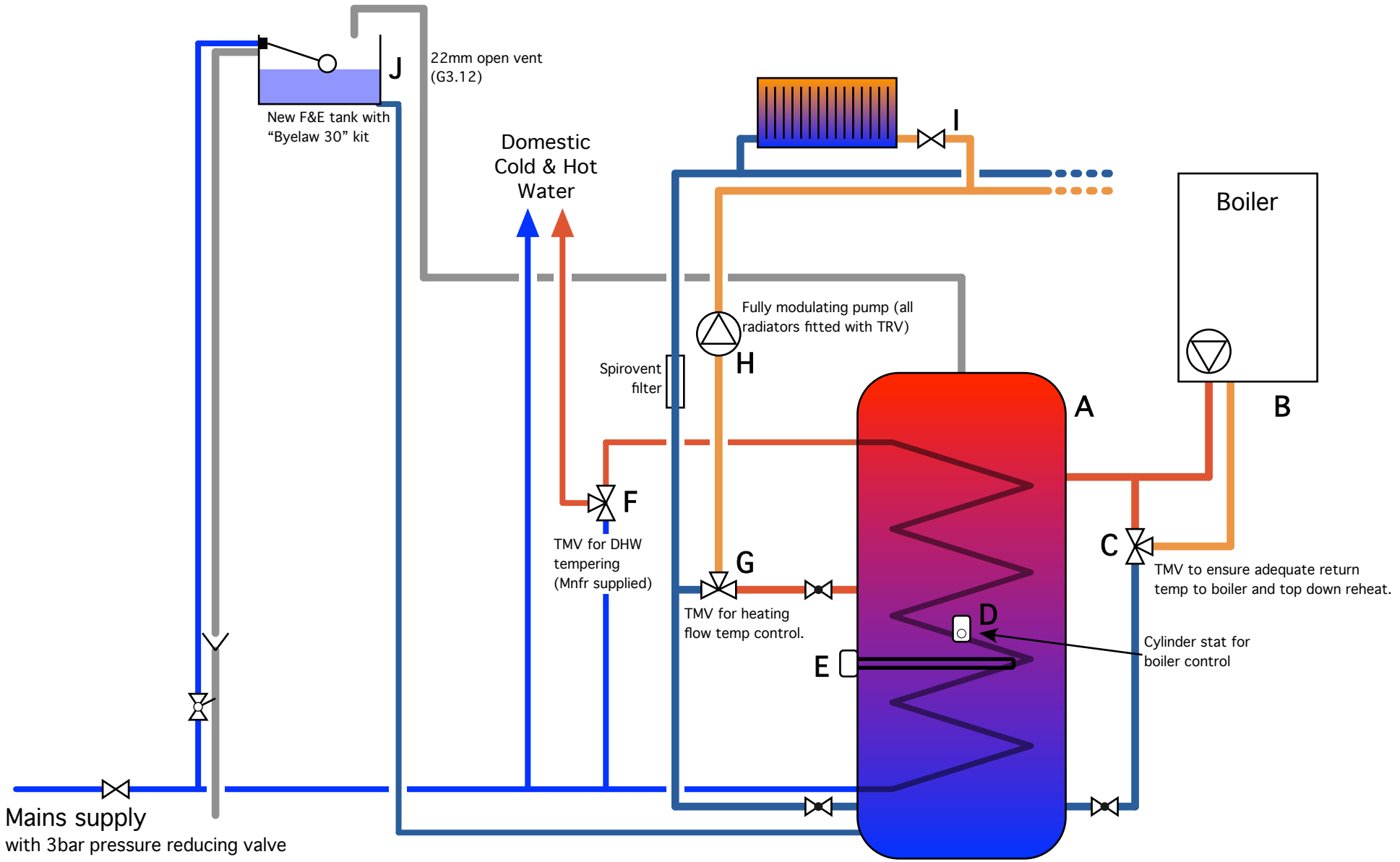

7 Millfield, Heating schematic
Drawn: S Hobson, updated 31-12-2010