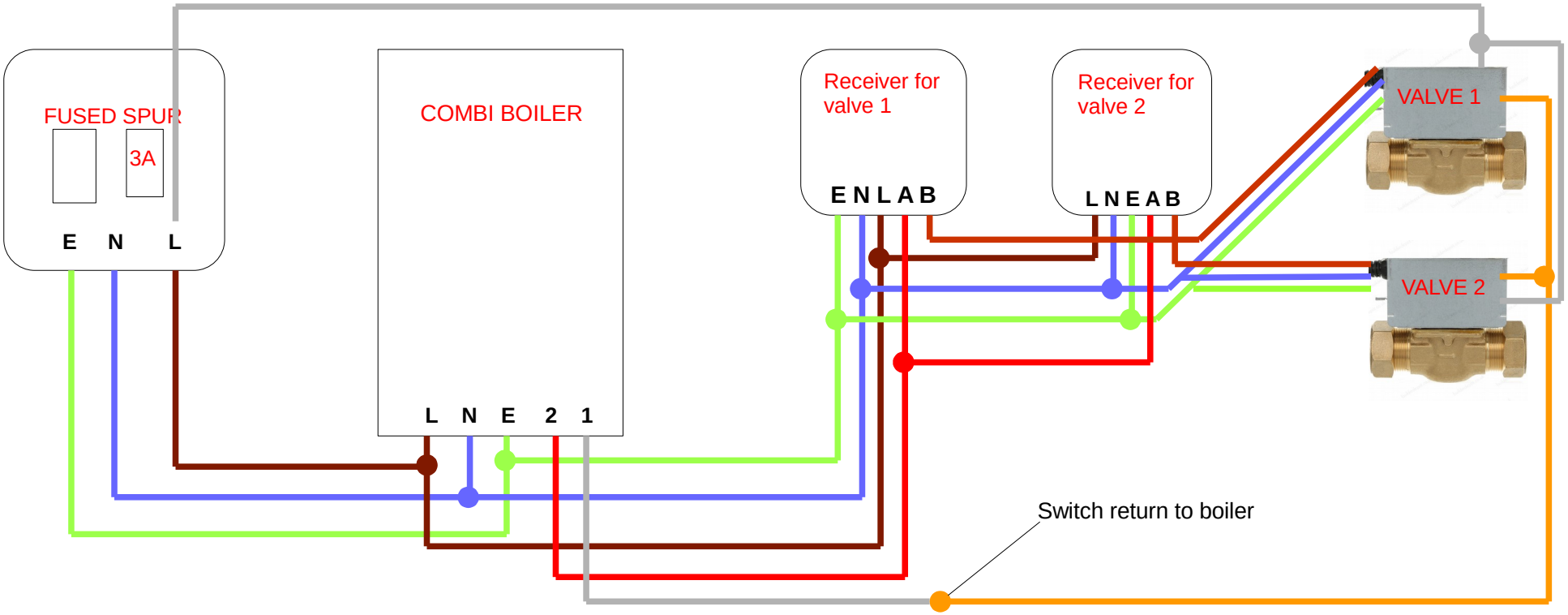

Above shows how 2 zone valves would control the boiler. The switch output from the boiler goes to the common side of the thermostat (or receiver on an RF stat). The call from the thermostat would go to the brown of the zone valve, this would in turn power the orange of the zone valve to then power the switch return to the boiler. The grey of the zone valve would be a permanent live to enable the independent switching, as in a normal S plan. This would allow independent switching of the boiler from either valve.